REVISION

LTR	DESCRIPTION	DATE	APPROVED
1	Revise material name to "ZINC COPPER ALLOY"	4.8.2004	K.F.IM
2	Change material from Polycarbonate to PBT/GF.	7.6.2007	K.F.IM

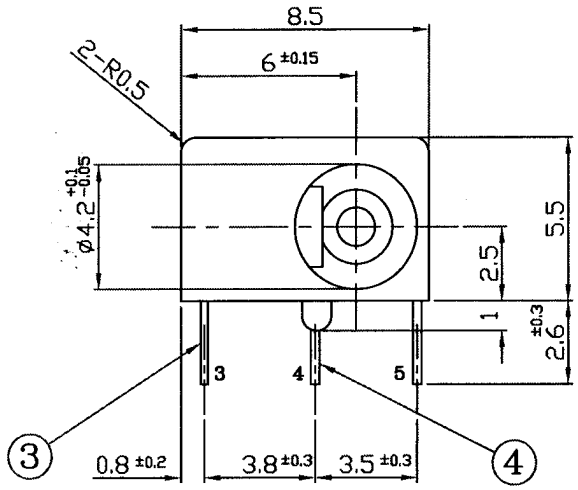

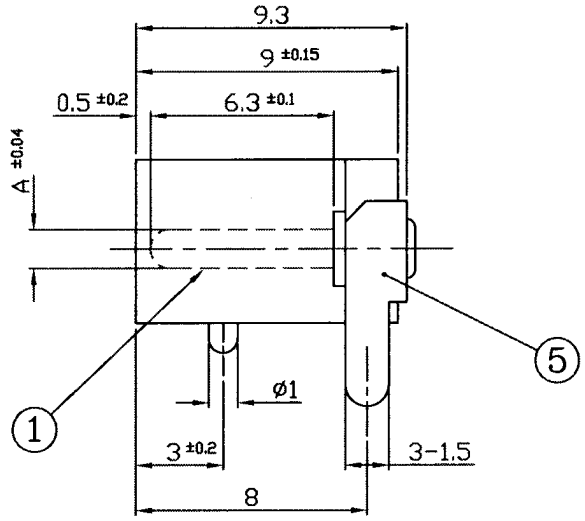

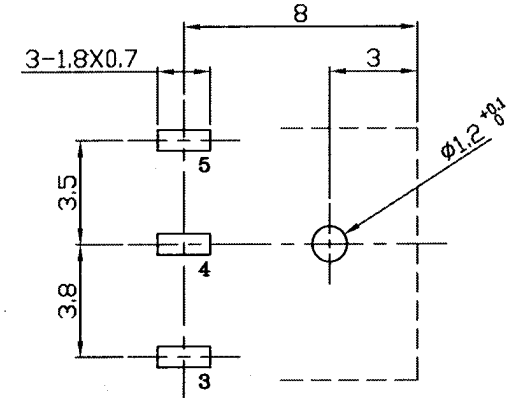

PC BOARD HOLE LAYOUT TOLS:±0.1
(VIEW FROM DIRECTION OF INSERTION TO PCB)

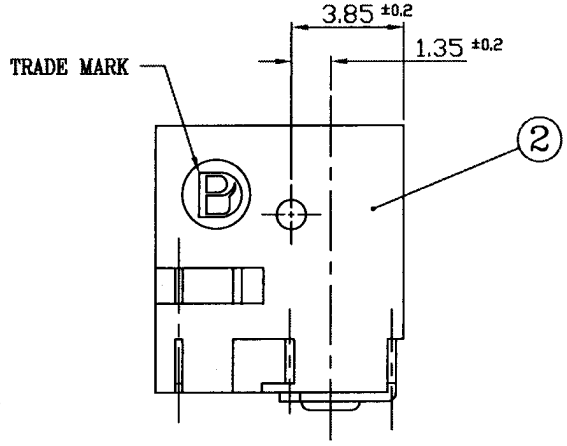

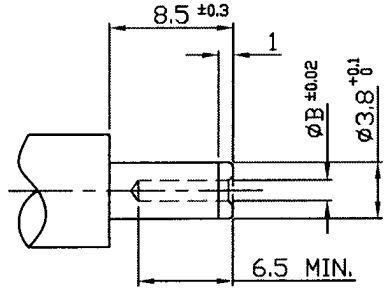

MATCHING PLUG 2/1

LET	PART NAME	QTY	MATREIAL	REMARK
5	EARTH TERMINAL	1	BRASS 0.3t	Ag-PLATED
4	SHUNT TERMINAL	1	BRASS 0.3t	Ag-PLATED
3	TIP SPRING	1	1 ZINC COPPER ALLOY ~~TSB-SH~~ 0.25t	Ag-PLATED
2	CASING	1	2 PBT/GF ~~POLYCARBONATE~~	BLACK
1	PIN	1	BRASS	Ni-PLATED

MODEL NO.	øA	øB
MJ-82-1	1.3	1.4
MJ-82-2	1.0	1.1

ALTERNATIVES FOR THE DIA. OF PIN(A) AND PLUG HOLE(B)

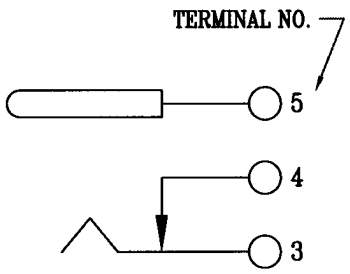

CIRCUIT DIAGRAM

TOLERANCES
X <= 5 = ±0.10
X > 5 = ±0.30
ANGULAR = ±---
DO NOT SCALE DWG.

FINISHED

PART NAME: MINI DC POWER JACK	DWG NO. MJ-82-1・MJ-82-2
MATL: AS SHOWN IN TABLE	SCALE 4/1 mm
DATE 09-08-2003	DRN / APPD. CXD/K.F.IM

MARUSHIN ELECTRIC MFG. CO., LTD