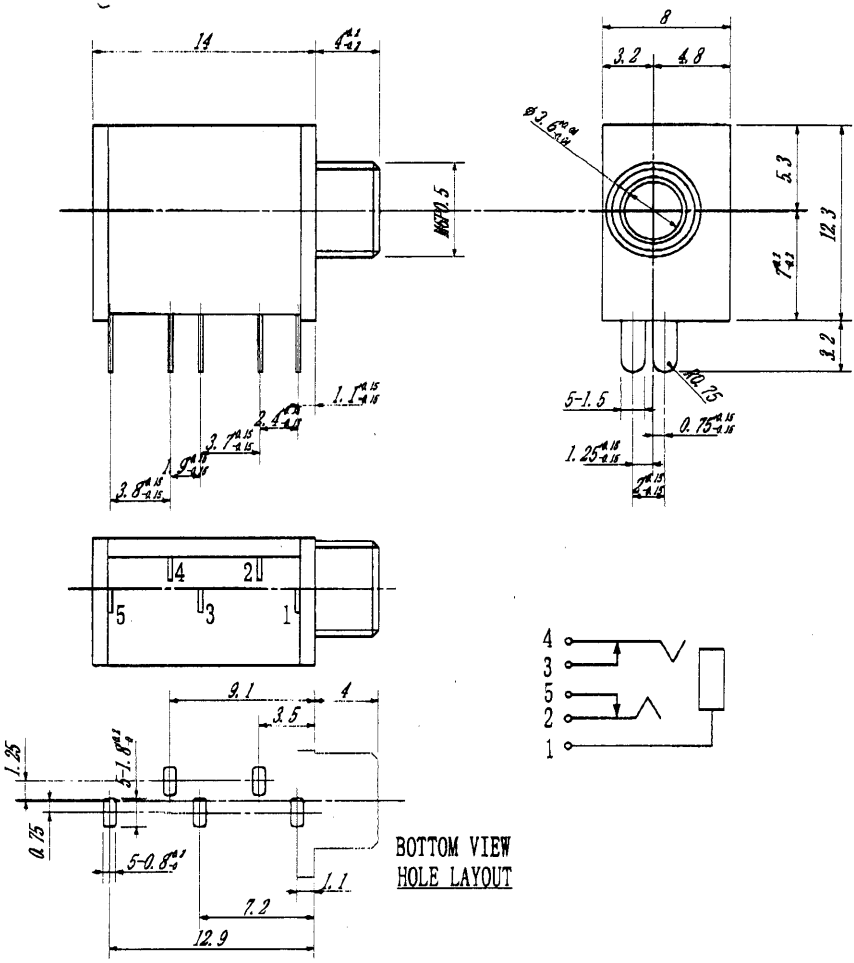

PART NAME	QTY	MATERIAL	PLATING	REMARKS
BODY	1	P.B.T.+G15%		BLACK (UL94V-0)
COVER	1	P.C.		
MAIN TERMINAL A	1	PBR-1/2H 0.3t	Ag	(TIP CONTACT)
MAIN TERMINAL B	1	PBR-1/2H 0.25t	Ag	(RING CONTACT)
FIX TERMINAL A	1	BsR2-H 0.3t	Ag	
FIX TERMINAL B	1	BsR2-H 0.3t	Ag	
EARTH TERMINAL	1	BsR2-H 0.3t	Ag	(SLEEVE CONTACT)
SPRING A	1	SUS-304		HEAT TREATMENT
SPRING B	1	SUS-304		HEAT TREATMENT
METAL	1	BsBM2	Ni-3	

YELL P/N: MJ-354W w/THREAD	3.5mm STEREO JACK	Unit: mm	Tol.: +/-0.3
CUSTOMER:	CUSTOMER P/N:		
DATE: 1993/05/15	マル信無線電機株式会社		