REVISION			
LTR	DESCRIPTION	DATE	APPROVED
1	CHANGE FROM PC TO POM	17.8.02	K.F.IM
2	CHANGE FR. TSB-SH TO COPPER ALLOY	16.6.03	K.F.IM

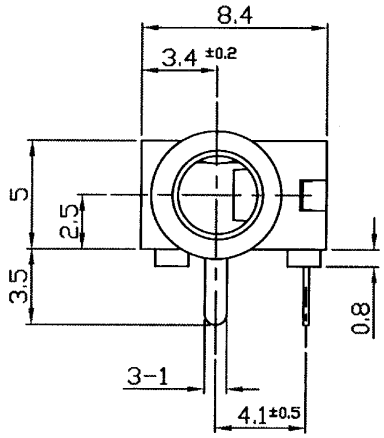

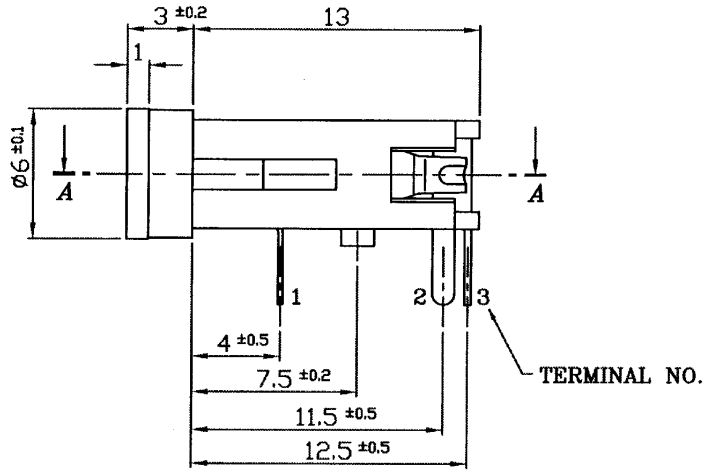

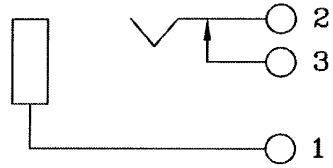

CIRCUIT DIAGRAM

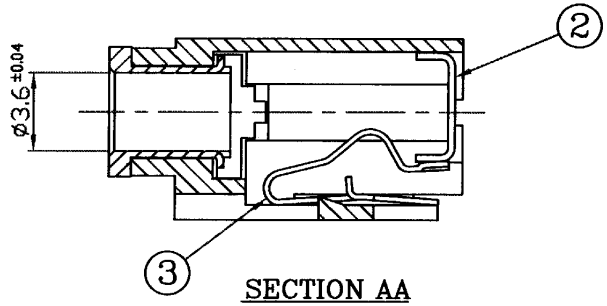

SECTION AA

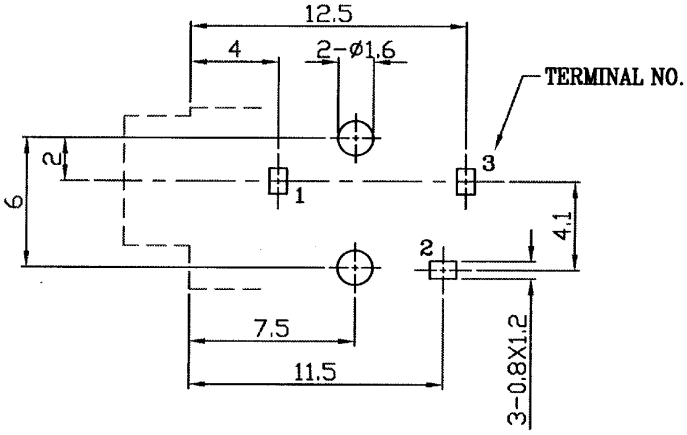

PC BOARD HOLE LAYOUT
(VIEW FROM DIRECTION OF INSERTION TO PCB)

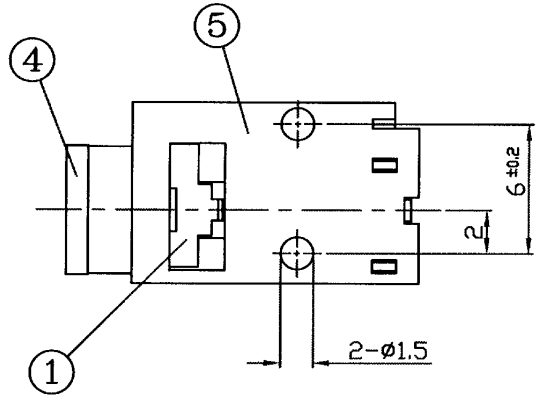

LET	PART NAME	QTY	MATREIAL		REMARK
5	BODY	1	~~POLYCARBONATE~~ POM (1)		BLACK
4	METAL BUSH	1	BRASS		Ni-PLATED
3	FIXED TERMINAL	1	BRASS	0.4t	Ag-PLATED
2	TIP SPRING	1	~~TSB-SH~~ (2) COPPER ALLOY	0.25t	Ag-PLATED
1	EARTH TERMINAL	1	STEEL	0.5t	Ag-PLATED

TOLERANCES
X <= 5 = ±0.10
X > 5 = ±0.30
ANGULAR = ±---
DO NOT SCALE DWG.

FINISHED
— — — — —

PART NAME: ø3.5 EARPHONE JACK	DWG NO. MJ-3235
MATL: AS SHOWN IN TABLE	SCALE 3/1 mm
DATE 25-9-98	DRN K.F.IM

MARUSHIN ELECTRIC MFG. CO., LTD