REVISION			
LTR	DESCRIPTION	DATE	APPROVED

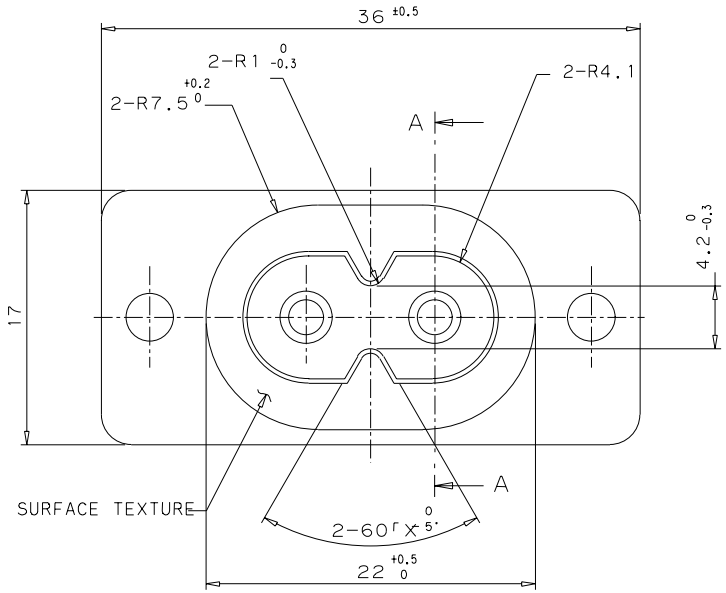

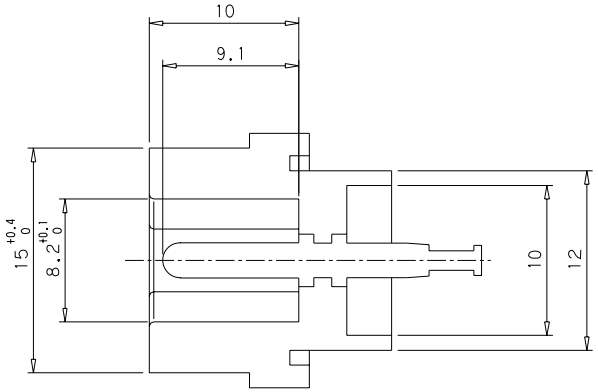

SECTION AA

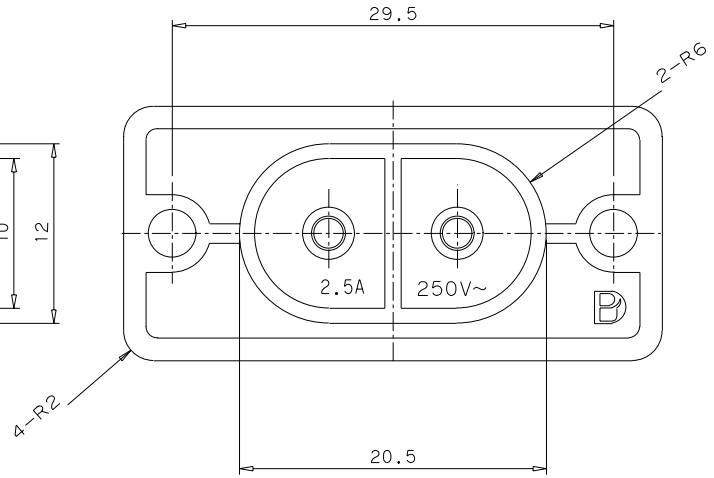

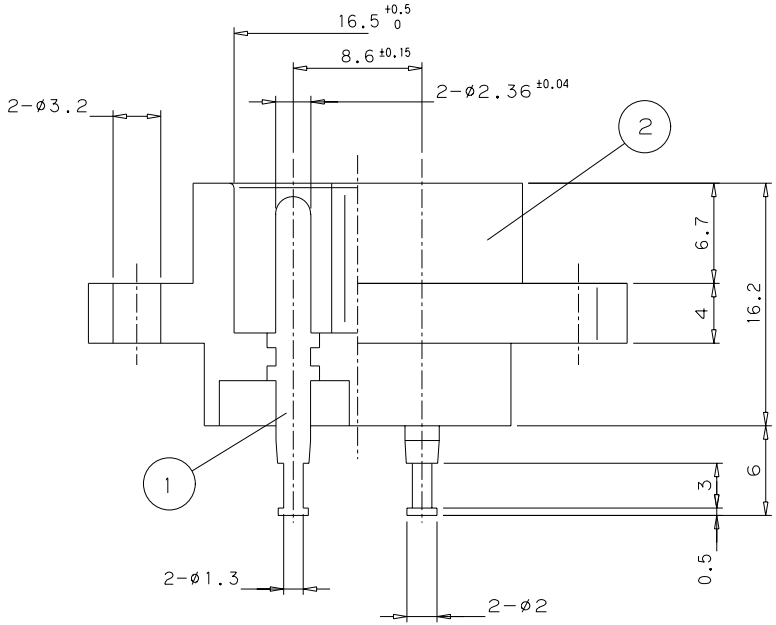

LET	PART NAME	QTY	MATERIAL	REMARK
2	SOCKET HOUSING	1	PET/GF UL94V-0	BLACK
1	PIN	2	FREE-CUTTING BRASS	Ni-PLATED

TOLERANCES
X <= 5 = ± 0.10
X > 5 = ± 0.30
ANGULAR = ± ---
DO NOT SCALE DWG.

FINISHED
— — — — — —

PART NAME: AC POWER SOCKET

DWG NO.: MJ-27S

MATL: AS SHOWN IN TABLE

SCALE: 2/1 mm

DATE: 16-10-2001

DRN: K.F.IM

MARUSHIN ELECTRIC MFG. CO.,LTD